Two handle kitchen faucet with Side Spray

825S Series

Feature:

- Metal lever handle
- With Side Spray
- Four-hole installation options
- Drip-free Ceramic catridge
- 1.8 gallons per minute Max at 60 psi
- Hybrid waterway

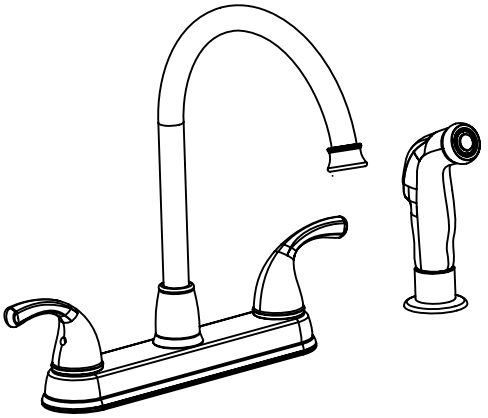

Codes/Standards Applicable:

Complies with:

- NSF 61-9
- ANSI/ASME A112.18.1
- CSA B125-1
- IAPMO/UPC/CUPC
- AB1953
- CEC

Model No./Colors/Finishes:

- 825S-CP Polished Chrome
- 825S-BN Brush Nickel PVD
- 825S-NB Nobel Bronze
- 825S-ORB Oil Rubbed Bronze
- 825S-PB Polished Brass PVD

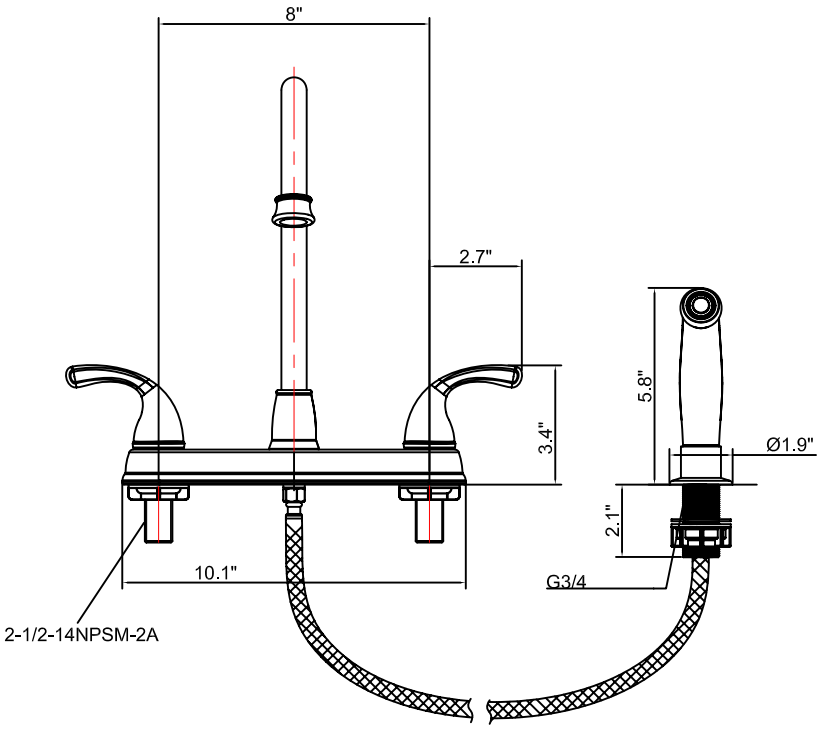

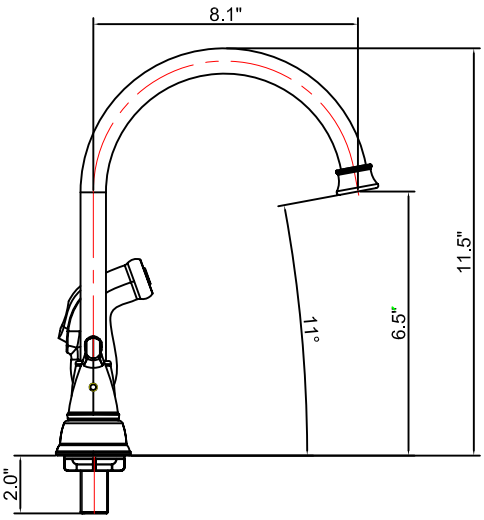

Product Diagram